MECHANICAL CONTRACTOR SHALL PROVIDE 2 HOUR FIRE DAMPER IN THE MAKE-UP AIR AT THE CHASE PENETRATION BEHIND THE COOK LINE PROVIDE AN ACCESS DOOR. THE ANSUL SUPPRESSION CONTRACTOR SHALL PROVIDE SUPPRESSION OF THE HOOD EXHAUST DUCTWORK FROM THE HOOD, INTO THE BASEMENT, THROUGH THE EXHAUST FAN AND OUT THROUGH THE EXHAUST LOUVER.

PROVIDE CLEANOUTS FOR GREASE DUCT ON 10 FOOT CENTERS AS PER CODE.

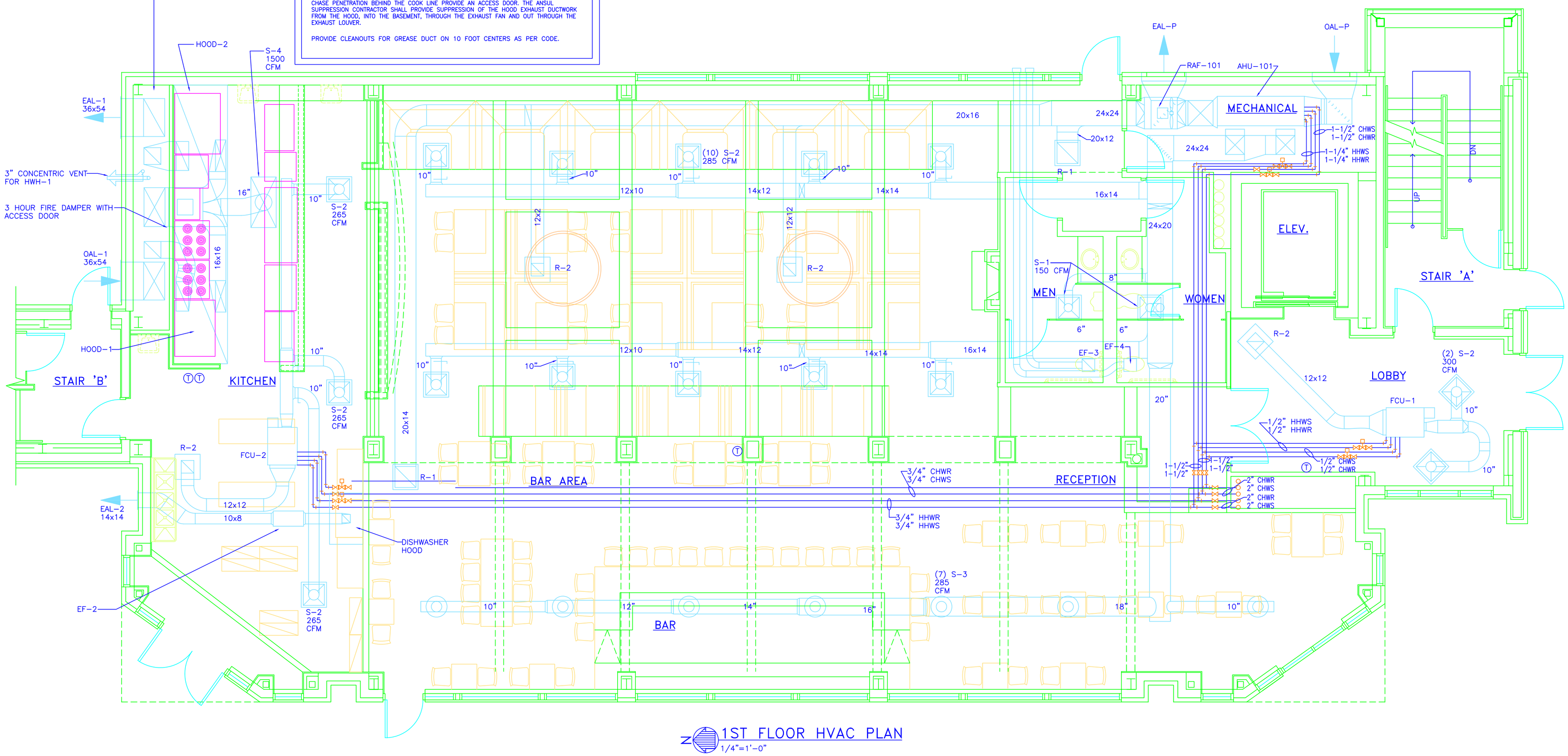

1ST FLOOR HVAC PLAN
1/4"=1'-0"

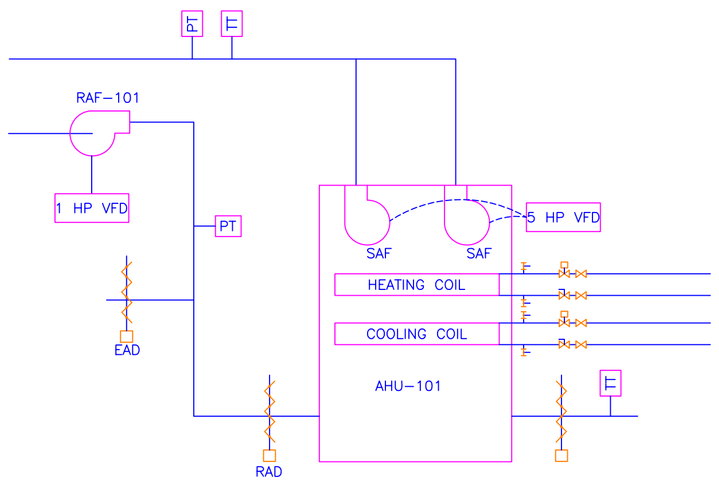

AHU PIPE & INST. DIAGRAM
SCALE: NONE

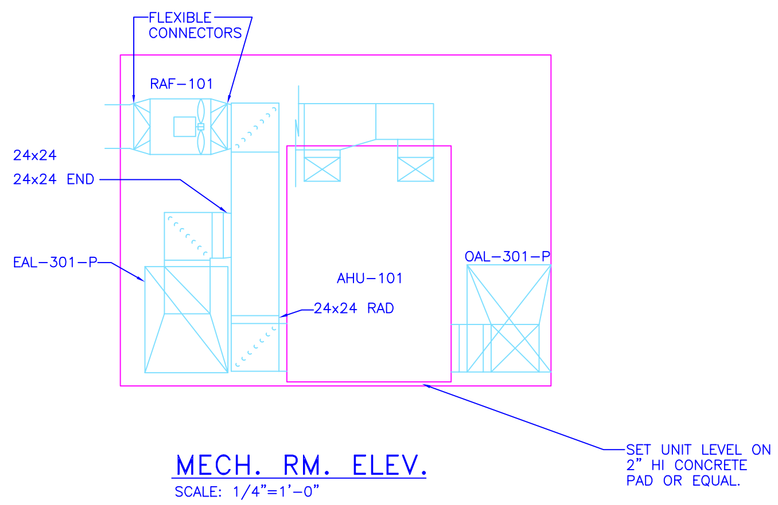

MECH. RM. ELEV.
SCALE: 1/4"=1'-0"

GLOBAL ASSOCIATES
www.convert2cad.com